皖南电机

YB3 Series Explosion-proof Induction Motors

- Frame sizes: 80 to 355 Rated output: 0.18 to 315kW
- Voltage: 380V,660V,380/660V 50Hz (for Exd-symbol Exd I and frame size 80-355);
- 660V/1140V 50Hz (for Exd-symbol Exd I and frame size 112-355);
- 380V, 660V, 380/660V 50Hz & 400V, 415V, 440V, 460V, 480V, 690V 60Hz (for Exd-symbol ExdⅡ)
- Degree of protection: IP55 Efficiency levels: IE2

Applications: Ideal for the coal mine where methane and coal dust may be present（Ex dⅠ）and dangerous explosion areas（Ex dⅡAT4、dⅡBT4）in the plant with the classⅡA, ⅡB and temperature T1~T4 flammable gas.

Features: Exd-symnbol ExdⅠ、ExdⅡAT4、ExdⅡBT4, Category Ⅰ:surface highest temperature no higher than 150℃(when coal dust may cover the motor surface), no higher than 450℃(when coal dust will not cover the surface or some protection work has been done to prevent the coal dust accumulation) Category Ⅱ:surface highest temperature no higher than T1（450℃）、T2（300℃）、T3（200℃）、T4（135℃）; Terminal box with three or six terminals for rubber jacket cable (plastic cable) and steel cable.

Ambient temperature: －15℃~35℃ in coal mine and －15℃~40℃ in plant.
Rated Voltage: 380V, 660V, 380/660V

Performance Data

380V 50Hz

Model	Output kW	FLA	RPM	Eff. η%	Power Factor	FLT N.m	LRT/FLT Tst/T_N	LRA/FLA Ist/I_N	BDT/FLT Tmax/T_N	dB(A)
Synchronous speed 3000r/min										
YB3-80M1-2	0.75	1.8	2855	77.4	0.83	2.51	2.3	6.8	2.3	67
YB3-80M2-2	1.1	2.5	2870	79.6	0.83	3.66	2.3	7.3	2.3	67
YB3-90S-2	1.5	3.3	2865	81.3	0.84	5.00	2.3	7.6	2.3	72
YB3-90L-2	2.2	4.7	2870	83.2	0.85	7.32	2.3	7.8	2.3	72
YB3-100L-2	3	6.2	2875	84.6	0.87	9.98	2.3	8.1	2.3	76
YB3-112M-2	4	8.0	2910	85.8	0.88	13.1	2.3	8.3	2.3	77
YB3-132S1-2	5.5	10.9	2935	87.0	0.88	17.9	2.2	8.0	2.3	80
YB3-132S2-2	7.5	14.5	2930	88.1	0.89	24.4	2.2	7.8	2.3	80
YB3-160M1-2	11	21.0	2950	89.4	0.89	35.6	2.2	7.9	2.3	86
YB3-160M2-2	15	28.4	2945	90.3	0.89	48.6	2.2	8.0	2.3	86
YB3-160L-2	18.5	34.7	2940	90.9	0.89	60.1	2.2	8.1	2.3	86

皖南电机

Performance Data

380V 50Hz

Model	Output kW	FLA	RPM	Eff. η%	Power Factor	FLT N.m	LRT/FLT Tst/T_N	LRA/FLA Ist/I_N	BDT/FLT Tmax/T_N	dB(A)
Synchronous speed 3000r/min										
YB3-180M-2	22	41.1	2950	91.3	0.89	71.2	2.2	8.2	2.3	88
YB3-200L1-2	30	55.7	2960	92.0	0.89	96.8	2.2	7.5	2.3	90
YB3-200L2-2	37	68.3	2960	92.5	0.89	119	2.2	7.5	2.3	90
YB3-225M-2	45	82.7	2965	92.9	0.89	145	2.2	7.6	2.3	92
YB3-250M-2	55	101	2970	93.2	0.89	177	2.2	7.6	2.3	93
YB3-280S-2	75	137	2975	93.8	0.89	241	2	6.9	2.3	94
YB3-280M-2	90	163	2970	94.1	0.89	289	2	7	2.3	94
YB3-315S-2	110	197	2975	94.3	0.9	353	2	7.1	2.2	96
YB3-315M-2	132	236	2975	94.6	0.9	424	2	7.1	2.2	96
YB3-315L1-2	160	282	2975	94.8	0.91	514	2	7.1	2.2	98
YB3-315L2-2	200	352	2975	95.0	0.91	642	2	7.1	2.2	98
YB3-355S1-2	185	326	2980	94.8	0.91	593	2	7.1	2.2	98
YB3-355S2-2	200	352	2980	95.0	0.91	641	2	7.1	2.2	98
YB3-355M1-2	220	387	2980	95.0	0.91	705	2	7.1	2.2	100
YB3-355M2-2	250	439	2980	95.0	0.91	801	2	7.1	2.2	100
YB3-355L1-2	280	492	2980	95.0	0.91	897	2	7.1	2.2	100
YB3-355L2-2	315	554	2980	95.0	0.91	1009	2	7.1	2.2	100
Synchronous speed 1500r/min										
YB3-80M1-4	0.55	1.4	1430	79.0	0.75	3.67	2.3	6.3	2.3	58
YB3-80M2-4	0.75	1.9	1425	79.6	0.75	5.03	2.3	6.5	2.3	58
YB3-90S-4	1.1	2.7	1420	81.4	0.75	7.40	2.3	6.6	2.3	61
YB3-90L-4	1.5	3.7	1420	82.8	0.75	10.1	2.3	6.9	2.3	61
YB3-100L1-4	2.2	4.9	1430	84.3	0.81	14.7	2.3	7.5	2.3	64
YB3-100L2-4	3	6.5	1430	85.5	0.82	20.0	2.3	7.6	2.3	64
YB3-112M-4	4	8.6	1450	86.6	0.82	26.3	2.3	7.7	2.3	65
YB3-132S-4	5.5	11.6	1465	87.7	0.82	35.9	2	7.5	2.3	71
YB3-132M-4	7.5	15.5	1465	88.7	0.83	48.9	2	7.4	2.3	71
YB3-160M-4	11	21.9	1470	89.8	0.85	71.5	2.2	7.5	2.3	75
YB3-160L-4	15	29.3	1470	90.6	0.86	97.4	2.2	7.5	2.3	75
YB3-180M-4	18.5	35.8	1470	91.2	0.86	120	2.2	7.7	2.3	76
YB3-180L-4	22	42.4	1465	91.6	0.86	143	2.2	7.8	2.3	76
YB3-200L-4	30	57.4	1475	92.3	0.86	194	2.2	7.2	2.3	79
YB3-225S-4	37	70.5	1480	92.7	0.86	239	2.2	7.3	2.3	81
YB3-225M-4	45	85.4	1480	93.1	0.86	290	2.2	7.4	2.3	81
YB3-250M-4	55	104	1485	93.5	0.86	354	2.2	7.4	2.3	83
YB3-280S-4	75	138	1490	94.0	0.88	481	2.2	6.7	2.3	86
YB3-280M-4	90	165	1485	94.2	0.88	579	2.2	6.9	2.3	86

YB3-315S-4	110	201	1485	94.5	0.88	707	2.2	6.9	2.2	93

Performance Data

380V 50Hz

Model	Output kW	FLA	RPM	Eff. η%	Power Factor	FLT N.m	LRT/FLT Tst/T_N	LRA/FLA Ist/I_N	BDT/FLT Tmax/T_N	dB(A)
Synchronous speed 1500r/min										
YB3-315M-4	132	241	1485	94.7	0.88	849	2.2	6.9	2.2	93
YB3-315L1-4	160	288	1485	94.9	0.89	1029	2.2	6.9	2.2	94
YB3-315L2-4	200	359	1485	95.1	0.89	1286	2.2	6.9	2.2	94
YB3-355S1-4	185	333	1490	94.9	0.89	1186	2.2	6.9	2.2	94
YB3-355S2-4	200	359	1490	95.1	0.89	1282	2.2	6.9	2.2	94
YB3-355M1-4	220	391	1490	95.1	0.90	1410	2.2	6.9	2.2	95
YB3-355M-4	250	444	1490	95.1	0.90	1602	2.2	6.9	2.2	95
YB3-355L1-4	280	497	1490	95.1	0.90	1795	2.2	6.9	2.2	95
YB3-355L2-4	315	559	1490	95.1	0.90	2019	2.2	6.9	2.2	95
Synchronous speed 1000 r/min										
YB3-80M1-6	0.37	1.2	910	67.0	0.70	3.88	1.9	4.7	2.1	54
YB3-80M2-6	0.55	1.7	910	70.0	0.72	5.77	1.9	4.7	2.1	54
YB3-90S-6	0.75	2.1	935	75.9	0.72	7.66	2.1	5.8	2.1	57
YB3-90L-6	1.1	2.9	935	78.1	0.73	11.2	2.1	5.9	2.1	57
YB3-100L-6	1.5	3.9	945	79.8	0.74	15.2	2.1	6	2.1	61
YB3-112M-6	2.2	5.5	965	81.8	0.74	21.8	2.1	6	2.1	65
YB3-132S-6	3	7.4	975	83.3	0.74	29.4	2	6.2	2.1	69
YB3-132M1-6	4	9.7	975	84.6	0.74	39.2	2	6.8	2.1	69
YB3-132M2-6	5.5	13.0	975	86.0	0.75	53.9	2	7.1	2.1	69
YB3-160M-6	7.5	16.8	975	87.2	0.78	73.5	2.1	6.7	2.1	73
YB3-160L-6	11	23.9	975	88.7	0.79	108	2.1	6.9	2.1	73
YB3-180L-6	15	31.4	980	89.7	0.81	146	2	7.2	2.1	73
YB3-200L1-6	18.5	38.4	980	90.4	0.81	180	2.1	7.2	2.1	76
YB3-200L2-6	22	44.8	980	90.9	0.82	214	2.1	7.3	2.1	76
YB3-225M-6	30	61.4	985	91.7	0.81	291	2	7.1	2.1	76
YB3-250M-6	37	72.6	985	92.2	0.84	359	2.1	7.1	2.1	78
YB3-280S-6	45	85.8	990	92.7	0.86	434	2.1	7.2	2	80
YB3-280M-6	55	104	990	93.1	0.86	531	2.1	7.2	2	80
YB3-315S-6	75	143	990	93.7	0.85	723	2	6.7	2	85
YB3-315M-6	90	173	990	94.0	0.84	868	2	6.7	2	85
YB3-315L1-6	110	209	990	94.3	0.85	1061	2	6.7	2	85
YB3-315L2-6	132	247	990	94.6	0.86	1273	2	6.7	2	85
YB3-355S-6	160	295	990	94.8	0.87	1543	2	6.7	2	92
YB3-355M1-6	185	341	990	94.8	0.87	1785	2	6.7	2	92
YB3-355M2-6	200	368	990	95.0	0.87	1929	2	6.7	2	92
YB3-355L1-6	220	404	990	95.0	0.87	2122	2	6.7	2	92
YB3-355L2-6	250	460	990	95.0	0.87	2412	2	6.7	2	92

皖南电机

Performance Data

380V 50Hz

Model	Output kW	FLA	RPM	Eff. η%	Power Factor	FLT N.m	LRT/FLT Tst/T_N	LRA/FLA Ist/I_N	BDT/FLT Tmax/T_N	dB(A)
Synchronous speed 750r/min										
YB3-80M1-8	0.18	0.9	700	51.0	0.61	2.46	1.8	3.3	1.9	52
YB3-80M2-8	0.25	1.2	700	54.0	0.61	3.41	1.8	3.3	1.9	52
YB3-90S-8	0.37	1.5	695	62.0	0.61	5.08	1.8	4	1.9	56
YB3-90L-8	0.55	2.2	695	63.0	0.61	7.56	1.8	4	2	56
YB3-100L1-8	0.75	2.4	705	70.0	0.67	10.2	1.8	4	2	59
YB3-100L2-8	1.1	3.4	705	72.0	0.69	14.9	1.8	5	2	59
YB3-112M-8	1.5	4.4	715	74.0	0.70	20.0	1.8	5	2	61
YB3-132S-8	2.2	6.0	730	79.0	0.71	28.8	1.8	6	2	64
YB3-132M-8	3	7.8	730	80.0	0.73	39.2	1.8	6	2	64
YB3-160M1-8	4	10.3	725	81.0	0.73	52.7	1.9	6	2	68
YB3-160M2-8	5.5	13.6	725	83.0	0.74	72.4	1.9	6	2	68
YB3-160L-8	7.5	17.8	730	85.5	0.75	98.1	1.9	6	2	68
YB3-180L-8	11	25.5	725	87.5	0.75	145	2	6.5	2	70
YB3-200L-8	15	34.1	730	88.0	0.76	196	2	6.6	2	73
YB3-225S-8	18.5	41.1	735	90.0	0.76	240	1.9	6.6	2	73
YB3-225M-8	22	47.4	735	90.5	0.78	286	1.9	6.6	2	73
YB3-250M-8	30	63.4	735	91.0	0.79	390	1.9	6.5	2	75
YB3-280S-8	37	77.8	740	91.5	0.79	478	1.9	6.6	2	76
YB3-280M-8	45	94.1	740	92.0	0.79	581	1.9	6.6	2	76
YB3-315S-8	55	111	740	92.8	0.81	710	1.8	6.6	2	82
YB3-315M-8	75	150	740	93.5	0.81	968	1.8	6.2	2	82
YB3-315L1-8	90	178	740	93.8	0.82	1161	1.8	6.4	2	82
YB3-315L2-8	110	217	740	94.0	0.82	1420	1.8	6.4	2	82
YB3-355S-8	132	261	745	93.7	0.82	1692	1.8	6.4	2	90
YB3-355M-8	160	315	745	94.2	0.82	2051	1.8	6.4	2	90
YB3-355L1-8	185	364	745	94.2	0.82	2371	1.8	6.4	2	90
YB3-355L2-8	200	387	745	94.5	0.83	2564	1.8	6.4	2	90
Synchronous speed 600 r/min										
YB3-315S-10	45	100	590	91.5	0.75	728	1.5	6.2	2	82
YB3-315M-10	55	121	590	92.0	0.75	890	1.5	6.2	2	82
YB3-315L1-10	75	162	590	92.5	0.76	1214	1.5	5.8	2	82
YB3-315L2-10	90	191	590	93.0	0.77	1457	1.5	5.9	2	82
YB3-355M1-10	110	230	595	93.2	0.78	1766	1.3	6.0	2	90
YB3-355M2-10	132	275	595	93.5	0.78	2119	1.3	6.0	2	90
YB3-355L1-10	160	333	595	93.5	0.78	2568	1.3	6.0	2	90
YB3-355L2-10	185	385	595	93.5	0.78	2969	1.3	6.0	2	90

皖南电机

Dimensions & Mounting

mm

B3 (Horizontal Foot Mounted Only)

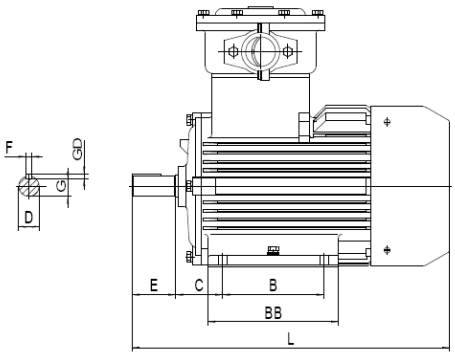

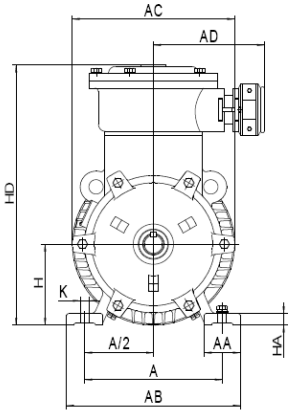

Frame	Poles	Mounting Dimension									Overall Dimension							
		A	B	C	D	E	F	G	H	K	AA	BB	HA	AB	AC	AD	HD	L
80M	2,4,6,8	125	100	50	19	40	6	15.5	80	10	34	150	10	160	165	180	300	330
90S	2,4,6,8	140	100	56	24	50	8	20	90	10	36	140	14	180	180	180	330	355
90L			125									165						385
100L	2,4,6,8	160	140	63	28	60	8	24	100	12	39	190	14	200	210	180	355	435
112M	2,4,6,8	190		70					112		50	180	16	240	230	205	370	460
132S	2,4,6,8	216	140	89	38	80	10	33	132	12	60	190	18	280	290	205	420	470
132M			178									230						510
160M	2,4,6,8	254	210	108	42	110	12	37	160	15	70	255	20	325	330	215	495	665
160L			254									300						695
180M	2,4,6,8	279	241	121	48	110	14	42.5	180	15	70	315	22	350	360	215	535	735
180L			279									350						770
200L	2,4,6,8	318	305	133	55	110	16	49	200	19	70	370	25	390	400	255	590	815
225S	4,8	356	286	149	60	140	18	53	225	19	75	355	28	435	450	255	630	855
225M	2		311		55	110	16	49				390						850
	4,6,8				60	140	18	53										880
250M	2	406	349	168	60	140	18		250	24	80	420	30	490	510	285	720	940
	4,6,8				65			58										
280S	2	457	368	190	65	140	18		280	24	90	460	35	545	550	285	785	1000
	4,6,8				75		20	67.5										
280M	2		419		65		18	58				510						1030
	4,6,8				75		20	67.5										
315S	2	508	406	216	65	140	18	58	315	28	120	570	45	630	630	365	960	1220
	4,6,8,10				80	170	22	71										1250
315M	2		457		65	140	18	58				680						1330
	4,6,8,10				80	170	22	71										1360
315L	2		508		65	140	18	58										1330
	4,6,8,10				80	170	22	71										1360
355S	2	610	500	254	75	140	20	67.5	355	28	116	640	50	730	730	365	1050	1420
	4,6,8,10				95	170	25	86										1450
355M	2		560		75	140	20	67.5				700						1500
	4,6,8,10				95	170	25	86										1530
355L	2		630		75	140	20	67.5				770						1600
	4,6,8,10				95	170	25	86										1630

B5 (Footless and B5 Flange Mounted)

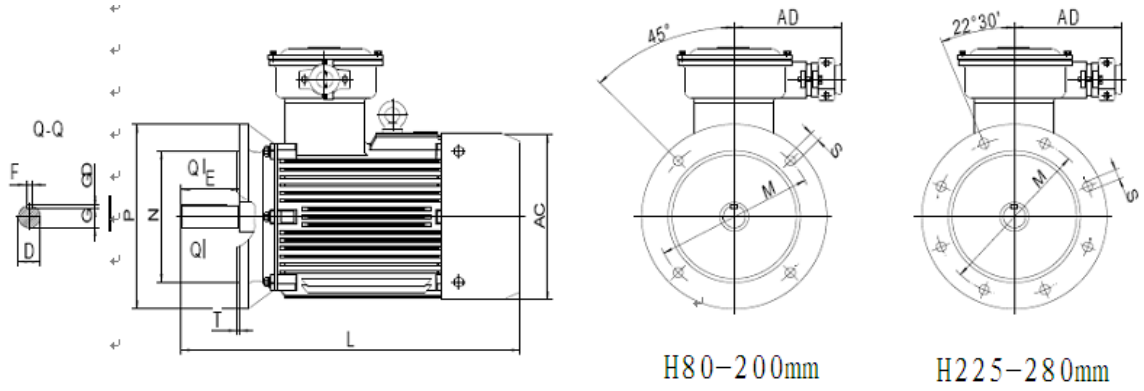

B35 (Foot and B5 Flange Mounted)

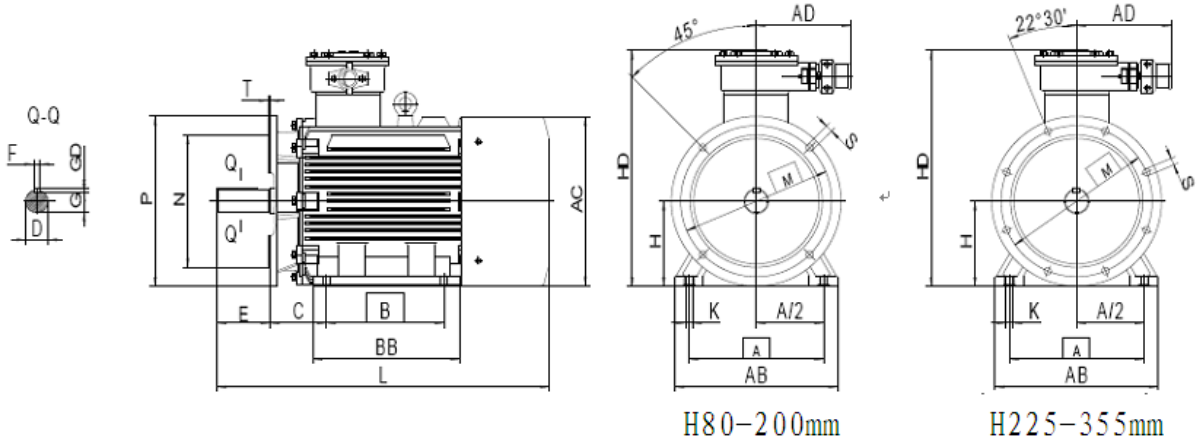

Frame	Poles	Mounting Dimension																Overall Dimension							
		A	B	C	D	E	F	G	H	K	M	N	P	R	S	T	凸缘孔数	AA	BB	HA	AB	AC	AD	HD	L
80M	2,4,6,8	125	100	50	19	40	6	15.5	80	10	165	130	200	0	12	3.5	4	34	150	10	160	165	180	300	330
90S	2,4,6,8	140	100	56	24	50	8	20	90	10	165	130	200	0	12	3.5	4	36	140	14	180	180	180	330	355
90L			125																165						385
100L	2,4,6,8	160	140	63	28	60	8	24	100	12	215	180	250	0	15	4	4	39	190	14	200	210	180	355	435
112M	2,4,6,8	190	140	70					112									50	180	16	240	230	205	370	460
132S	2,4,6,8	216	140	89	38	80	10	33	132	12	265	230	300	0	15	4	4	60	190	18	280	290	205	420	470
132M			178																230						510
160M	2,4,6,8	254	210	108	42	110	12	37	160	15	300	250	350	0	19	5	4	70	255	20	325	330	215	495	665
160L			254																300						695
180M	2,4,6,8	279	241	121	48	110	14	42.5	180	15	300	250	350	0	19	5	4	70	315	22	350	360	215	535	735
180L			279																350						770
200L	2,4,6,8	318	305	133	55	110	16	49	200	19	350	300	400	0	19	5	4	70	370	25	390	400	255	590	815
225S	4,8	356	286	149	60	140	18	53	225	19	400	350	450	0	19	5	8	75	355	28	435	450	255	630	855
225M	2		311		55	110	16	49											390						850
	4,6,8				60	140	18	53																	880
250M	2	406	349	168	60	140	18	53	250	24	500	450	550	0	19	5	8	80	420	30	490	510	285	720	940
	4,6,8				65			58																	

280S	2	457	368	190	65	140	18	58	280	24	500	450	550	0	19	5	8	90	460	35	545	550	285	785	1000
	4,6,8				75		20	67.5																	
280M	2		419		65		18	58											510						1030
	4,6,8				75		20	67.5																	
315S	2	508	406	216	65	140	18	58	315	28	600	550	660	0	24	6	8	120	570	45	630	630	365	960	1220
	4,6,8,10				80	170	22	71																	1250
315M	2		457		65	140	18	58											680						1330
	4,6,8,10				80	170	22	71																	1360
315L	2		508		65	140	18	58																	1330
	4,6,8,10				80	170	22	71																	1360
355S	2	610	500	254	75	140	20	67.5	355	28	740	680	800	0	24	6	8	116	640	50	730	730	365	1050	1420
	4,6,8,10				95	170	25	86																	1450
355M	2		560		75	140	20	67.5											700						1500
	4,6,8,10				95	170	25	86																	1530
355L	2		630		75	140	20	67.5											770						1600
	4,6,8,10				95	170	25	86																	1630

Conventional mounting type and suitable frame size are given in following table（with “√”）

机座号 Frame	基本安装结构 Basic Type			派生的安装形式 Derived Type													
	B3	B5	B35	V1	V3	V5	V6	B6	B7	B8	V15	V17	V35	V37	B14	B34	V18
80～112	√	√	√	√	√	√	√	√	√	√	√	√	√	√	√	√	√
132～160	√	√	√	√	√	√	√	√	√	√	√	√	√	√	-	-	-
180～280	√	√	√	√	-	-	-	-	-	-	-	-	-	-	-	-	-
315～355	√	-	√	√	-	-	-	-	-	-	-	-	-	-	-	-	-

Note: “√” indicates the type of structure that can be manufactured. When ordering the motor, if the terminal box is not specified, it is top type.